XILINX SPARTAN-3 FPGA MODULE BLOCK SCHEME

MODEL: XMF3-200-1 *M, XMF3-400-2 *M, XMF3-1000-4 *M.

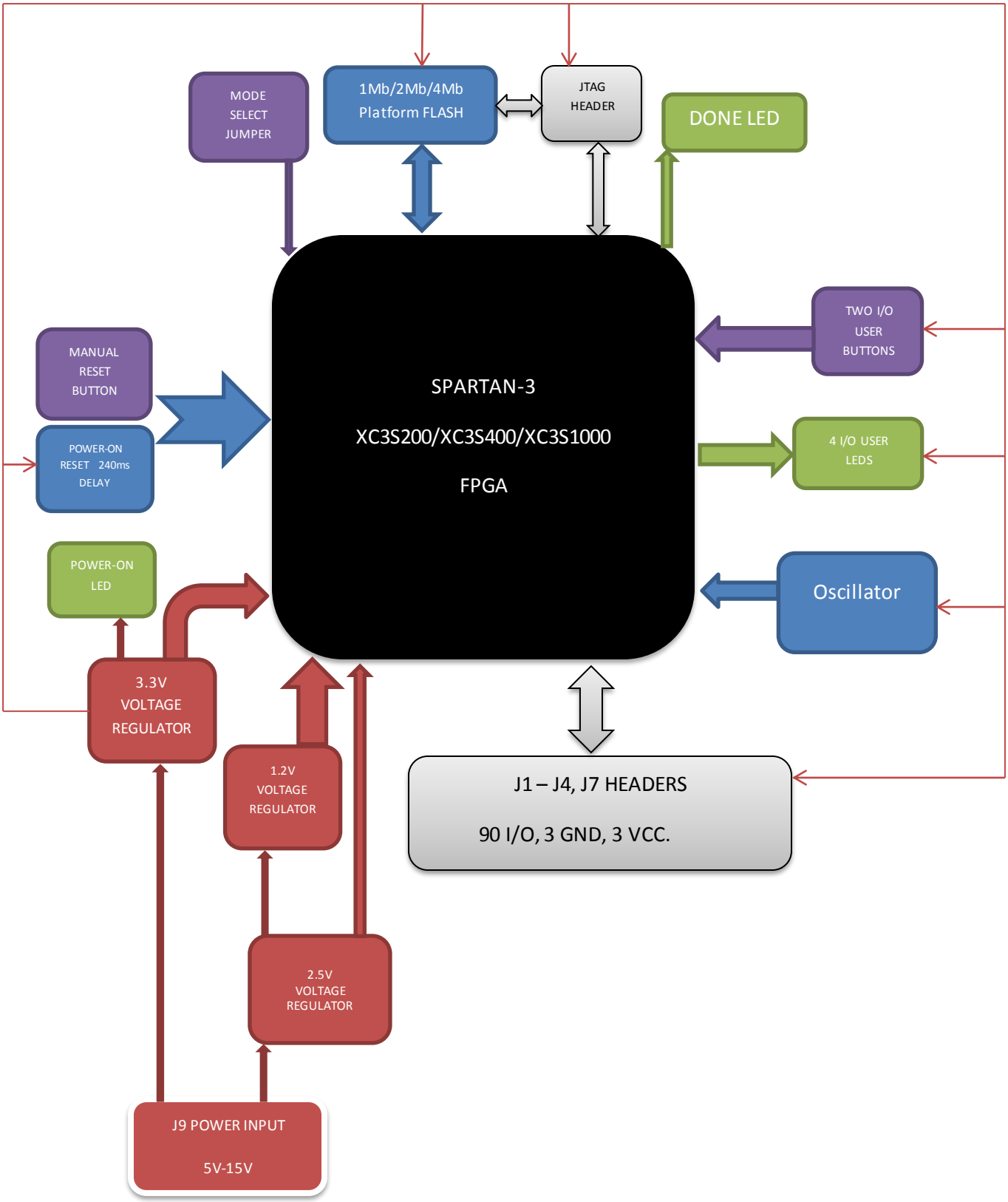

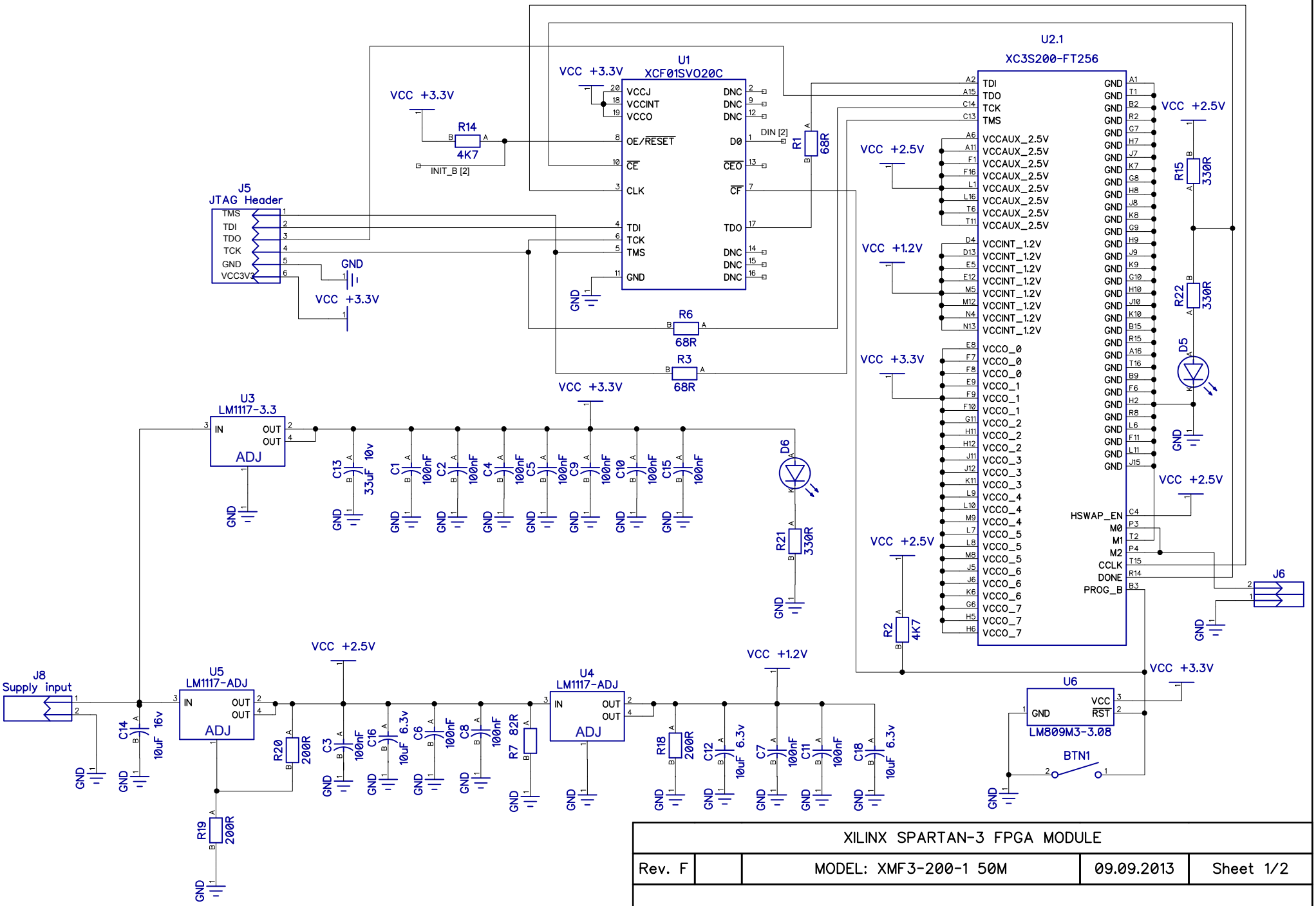

*R18 - R20 will be not installed, if regulators with fixed voltage are used.

XILINX SPARTAN-3 FPGA MODULE				
Rev. F		MODEL: XMF3-200-1 50M	09.09.2013	Sheet 1/2
POWER SUPPLY, JTAG, FLASH.				

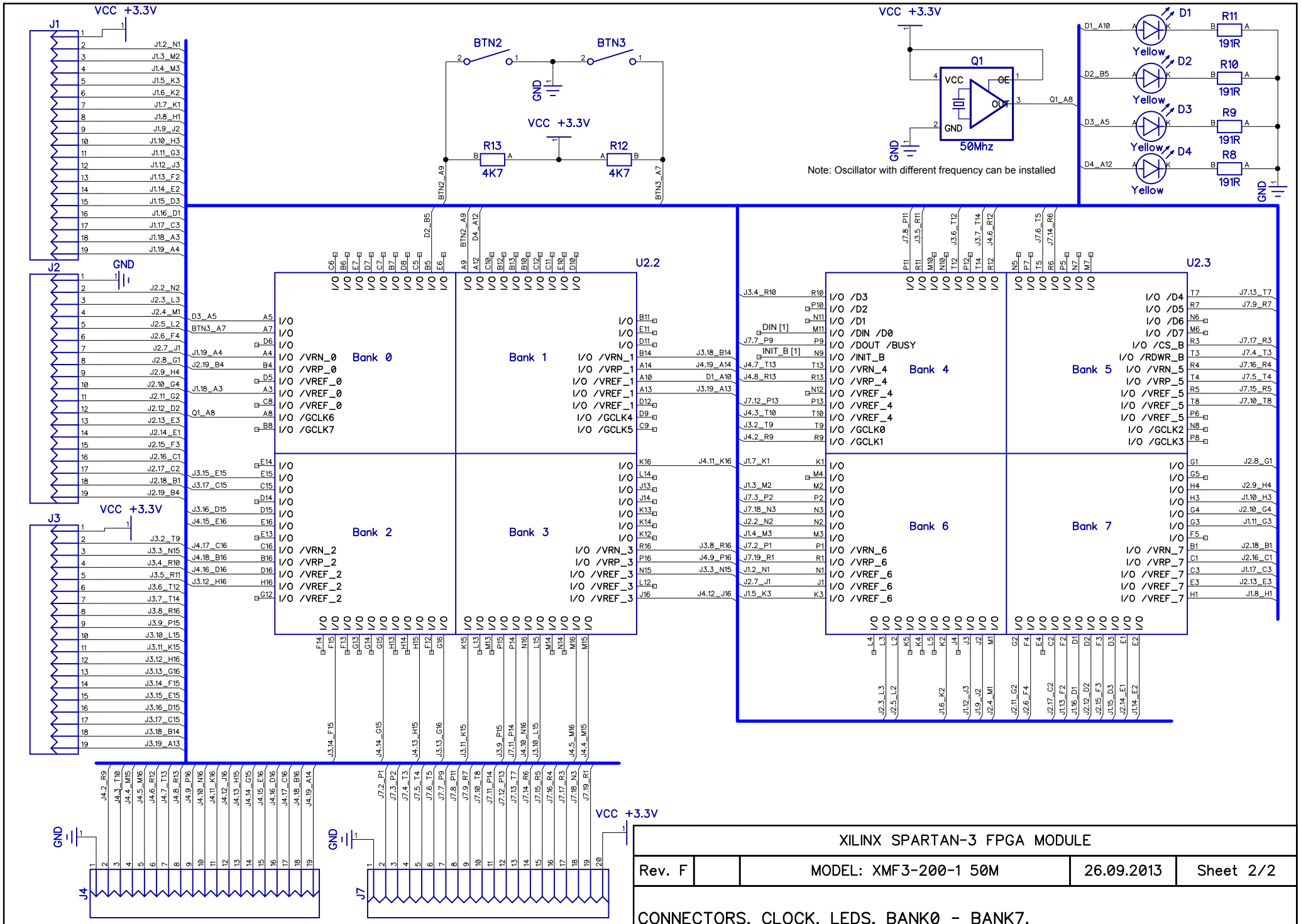
XILINX SPARTAN-3 FPGA MODULE
Rev. F
MODEL: XMF3-200-1 50M
26.09.2013
Sheet 2/2
CONNECTORS, CLOCK, LEDS, BANK0 - BANK7.
Note: Oscillator with different frequency can be installed
VCC +3.3V
GND
J1
J2
J3
J4
J7
BTN2
BTN3
R13
4K7
R12
4K7
Q1
50Mhz
D1
D2
D3
D4
Yellow
R11
R10
R9
R8
191R
U2.2
U2.3
Bank 0
Bank 1
Bank 2
Bank 3
Bank 4
Bank 5
Bank 6
Bank 7

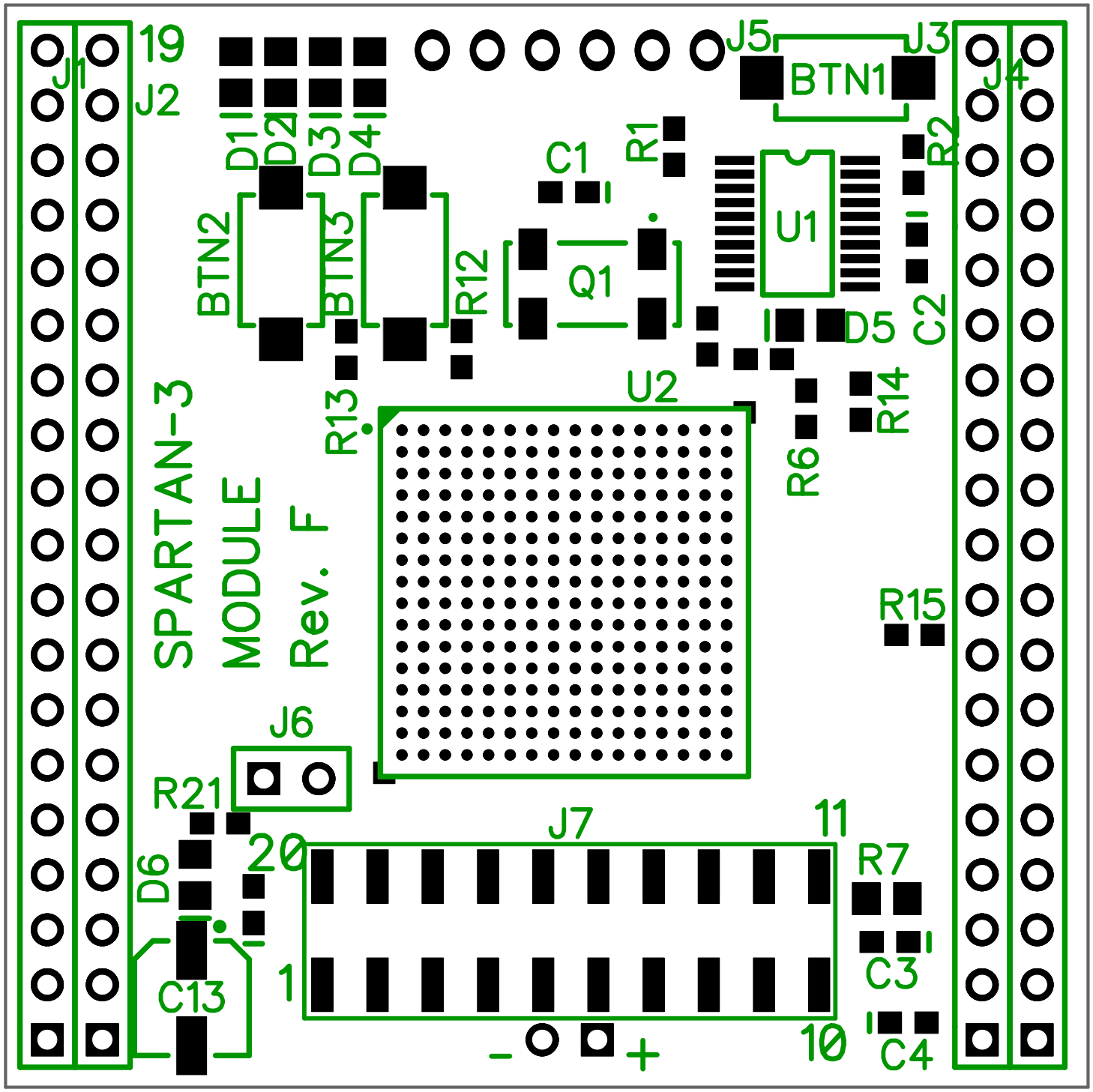
J1
19
J2
D1
D2
D3
D4
J5
J3
BTN1
J4
C1
R1
R2
U1
BTN2
BTN3
R12
Q1
D5
C2
R13
U2
R14
R6
SPARTAN-3
MODULE
Rev. F
R15
J6
R21
J7
11
20
D6
R7
C3
1
C13
10
C4
-
+

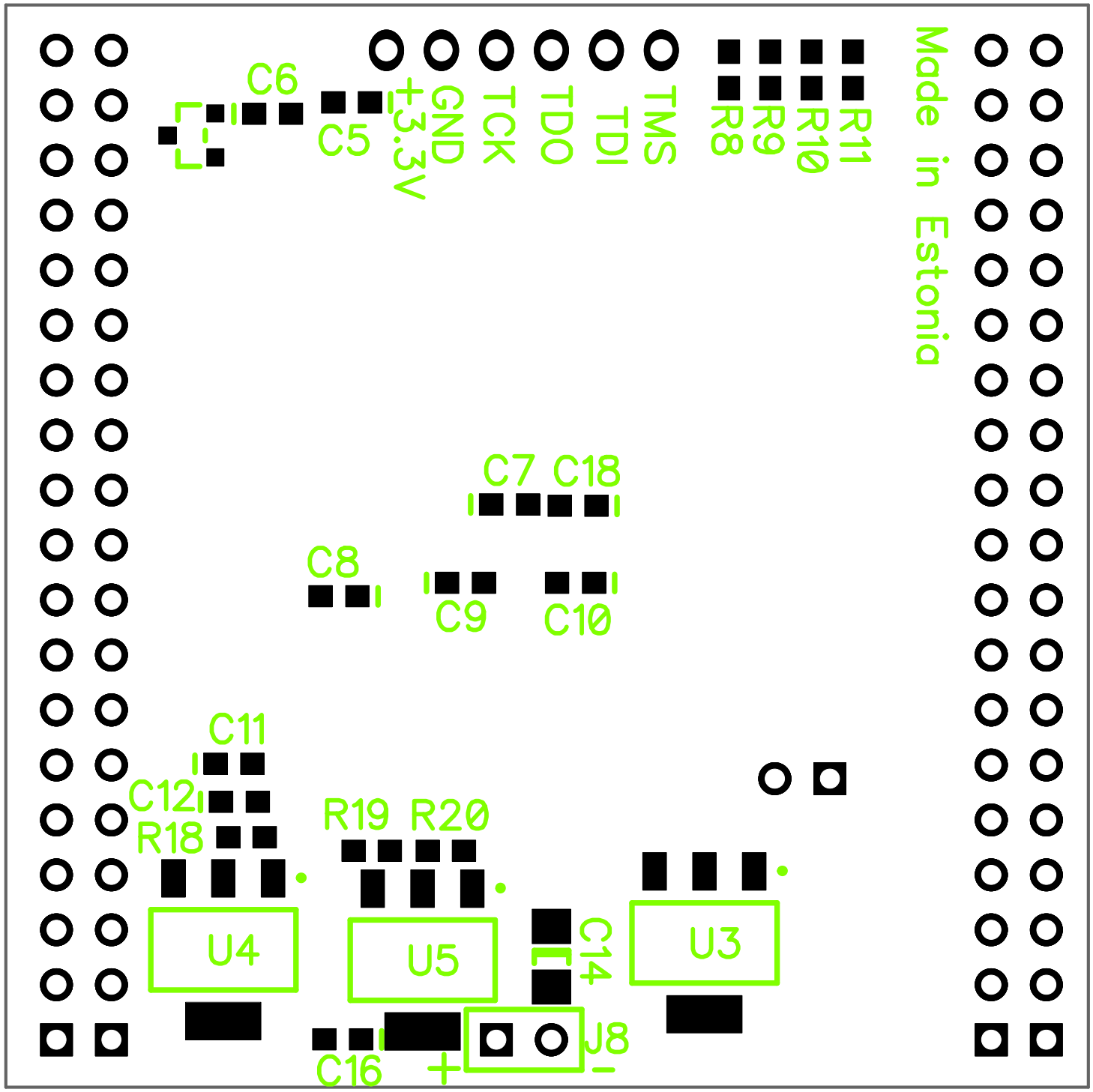
C6
C5
+3.3V
GND
TCK
TDO
TDI
TMS
R8
R9
R10
R11
Made in Estonia
C7
C18
C8
C9
C10
C11
C12
R18
R19
R20
U4
U5
C14
U3
J8
C16
+
-

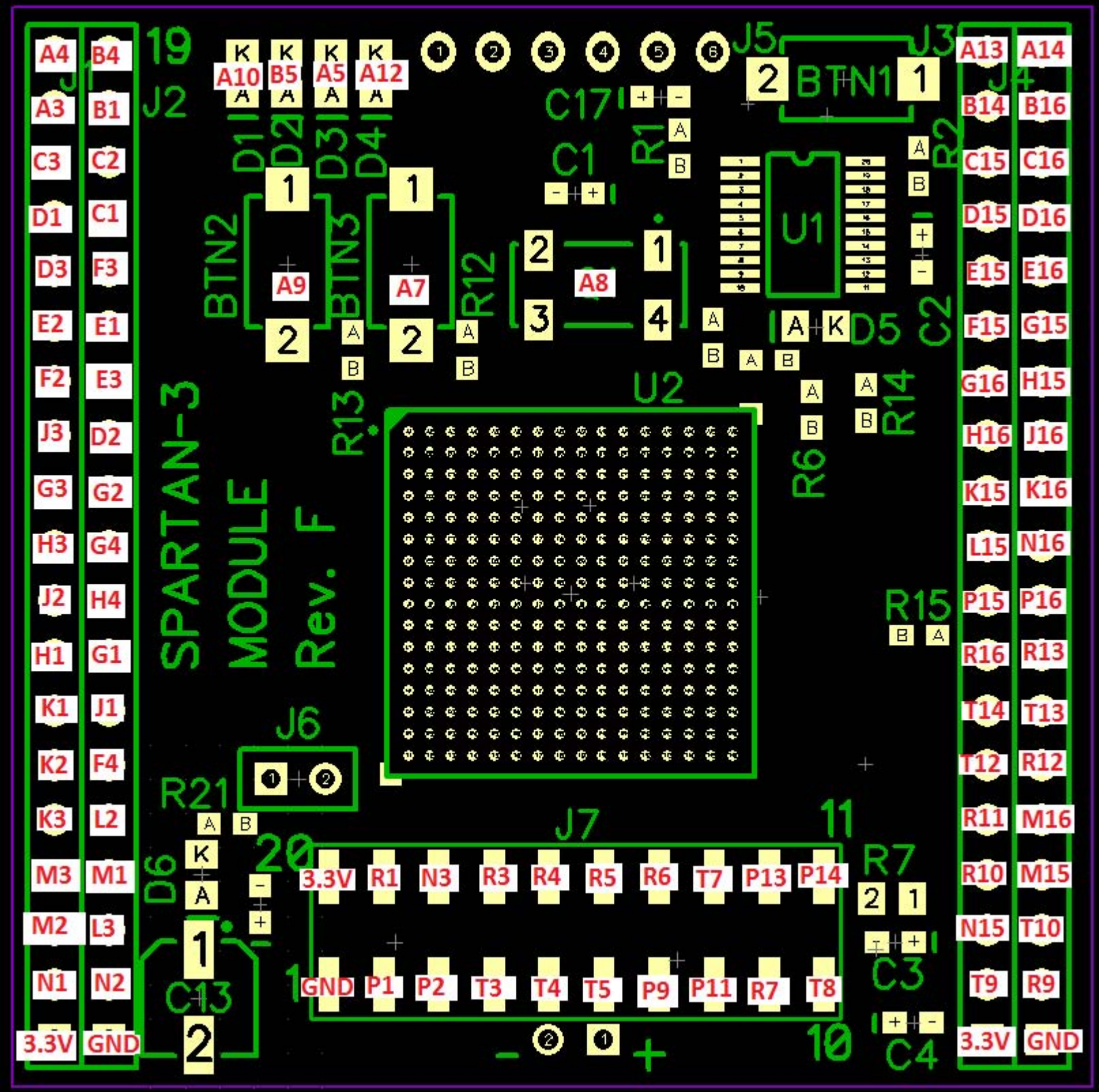
SPARTAN-3
MODULE
Rev. F
J1
J2
J3
J4
J5
J6
J7
BTN1
BTN2
BTN3
U1
U2
D1
D2
D3
D4
D5
D6
C1
C2
C3
C4
C13
C17
R1
R2
R6
R7
R12
R13
R14
R15
R21
A4 B4 A3 B1 C3 C2 D1 C1 D3 F3 E2 E1 F2 E3 J3 D2 G3 G2 H3 G4 J2 H4 H1 G1 K1 J1 K2 F4 K3 L2 M3 M1 M2 L3 N1 N2 3.3V GND
A13 A14 B14 B16 C15 C16 D15 D16 E15 E16 F15 G15 G16 H15 H16 J16 K15 K16 L15 N16 P15 P16 R16 R13 T14 T13 T12 R12 R11 M16 R10 M15 N15 T10 T9 R9 3.3V GND
A10 B5 A5 A12
A9 A7 A8
3.3V R1 N3 R3 R4 R5 R6 T7 P13 P14
GND P1 P2 T3 T4 T5 P9 P11 R7 T8